BURLINGTON

3.5 SEATER FORMAL CUSHION

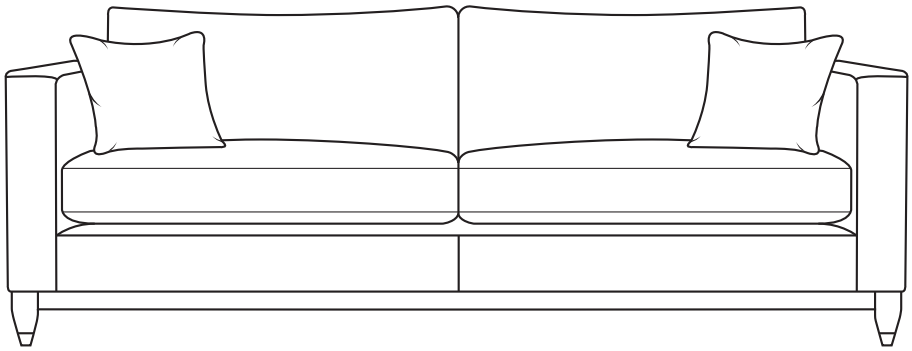

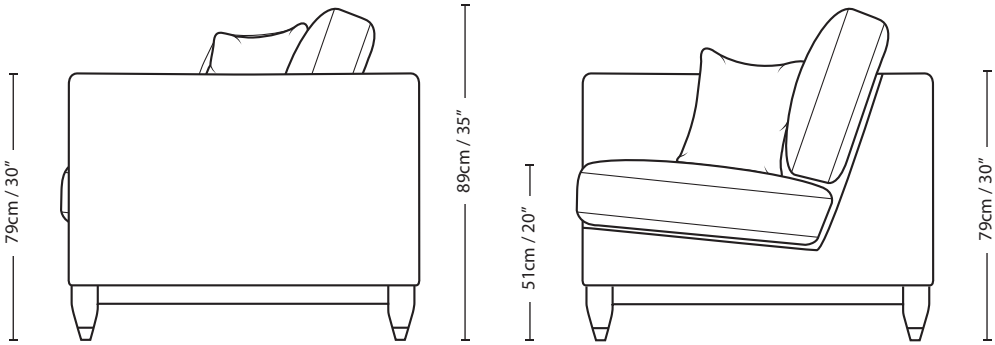

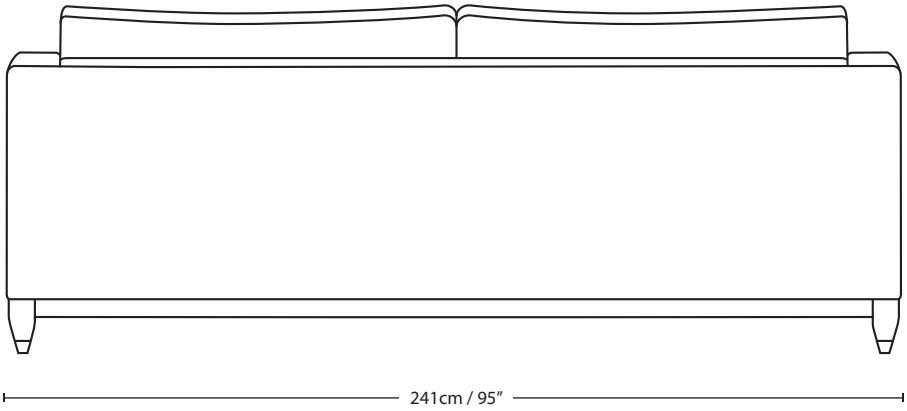

Overall Height	Overall Width	Overall Depth	Arm Height	Back Height of Frame	Seat Height	Arm Width	Inside Width Arm to Arm	Seat Depth to Cushions	Seat Depth no Cushions
89cm / 35″	241cm / 95″	99cm / 39″	79cm / 30″	79cm / 30″	51cm / 20″	15cm / 6″	211cm / 83″	56cm / 22″	74cm / 29″

Seating sizes vary to a great extent and particularly wherever there are soft cushions involved, this is magnified with front of seat to back cushion depths, whilst formal back cushions will vary with age and plumping. It is essential to note that scatter back cushion depths will adjust from which point you measure, overtime and with plumping, the accurate measurement does not exist as it will resize each and every time you enjoy its comfort.